User manual

Digital Controller DGT300+

Contents DGT 300+

Seite

1. Kit Components 3
2. Dimensions and Fixing 4
3. Setting up - Overview 5
4. Diagnose a fault 6
5. PC software – Installation and Use 6
6. Wiring 6
7. Connections 8
8. Applications 9
8.2 Load cell 10
8.3 Dancer 11
8.4 Load Cells and motor 12
8.5 Load cells, Clutch/ Brake and Motor 13
9. Keypad Basics 14

1. Kit Components

1 Digital controller DGT300+
1 Front panel
1 Accessories kit
1 USB wire PC – DGT+
1 CD PC Software- Installation & Use+ User manual

Important- Use Precaution

Do not install DGT300+ in a zone with presence

- of excessive and/or conductive dust
- of corrosive and/or flammable gas
- of excessive heat
- of important shocks and vibrations

Installations has to be done in accordance with electric standards

Forced cooling is compulsory in case of installation in closed enclosure cabinet. Vertical mounting position is recommended

Device never has to be in touch high humidity environment or water, fluid projection

During installation (and production) prevent external particles or objects falling inside unit

Install cables and equipments as short as possible of power and high voltage

2. Dimensions and Fixing

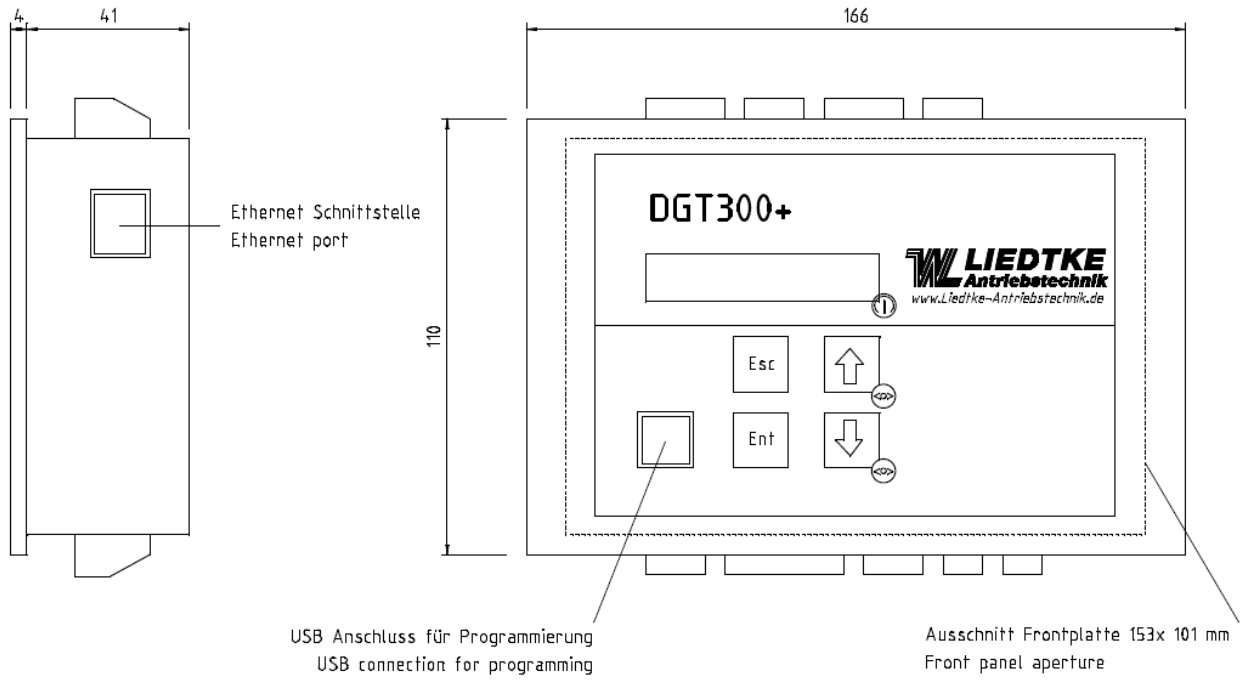

Fixing clamp
Mounting

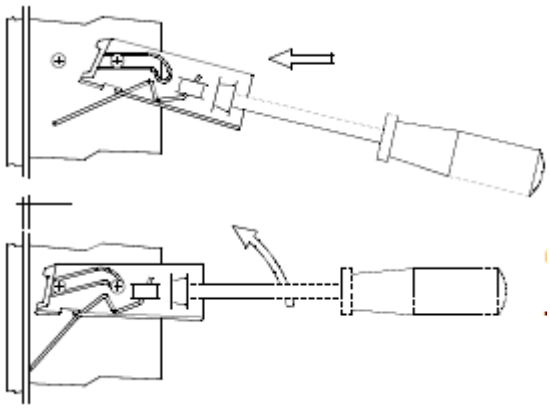

3. Setting up - Overview

Two different ways are offered for the setting up of your DGT300+

Use the exclusive user friendly setting up software DGT soft+ on computer via USB connection.

Choose required type of application, fill in the data fields with your own data, and upload the file to the DGT300+.
At any point in the software you can call the help online which gives you more details about the procedure.

Use the Front face keypad when there is no computer available. (Password requested: Esc-Ent-Esc-Ent-Esc)

The procedure is based on the “Initial set of parameters” related to each type of Application (see documentation in CD- rom).
Enter data following menu page 1.

3.1 - Sensors calibration

Follow the automatic calibration procedure

Software : Homepage > Connect > open your application

Keypad : Input menu > measure >... (load cells torque sensor)
Input menu > diameter > ... (diameter sensor)

3.2 – Set point value

Open loop: define Effort max available on > set point is of the full scale defined in Effort max

Close loop: enter directly target value

Note: Set point is adjustable at any time with front panel keypad.

3.3 – Inputs/ Outputs, dynamic parameters, power output limitation

Regulation stability

When necessary, adjust parameters marked (*) in case studies manual to improve system stability
Variable PID function (coefficients proportional to diameter) can be used in case of issues with stability.
Diameter measurement is then required

Note: Parameters recommended for each standard application are available in user manual in CD rom.

4. Diagnose a fault

Check
All wiring, in particular ensure cables shields are properly connected.

Ensure the parameter settings are in full accordance with the related application tables.

5. PC software – Installation and Use

The CD- rom contains DGT soft+ (PC software)
Launch the “Setup” file to automatically install DGT soft+ on your PC.
During installation process, a shortcut is automatically created on the desktop and in start / program directory.
The application is launched by a double click on the icon.

To start with DGT soft+, open tutorial in CD- rom.
In case of problem, some update files are available in:
Windows C extra software directory included in CD- rom.

Driver for port COM is also available in CD- rom case issues with USB

6. Wiring

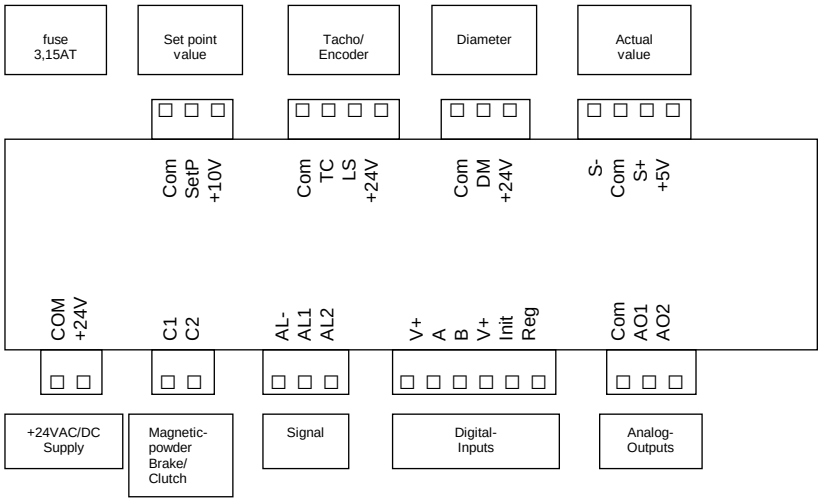

6.1 – Configuration process (A and B Inputs)

A an B Inputs:

Digital inputs A and B are dedicated to the management of the controller global status in accordance with the opposite table.
(expect No-stop mode activated).

AO2 is dedicated for external readout (measure, set point or diameter)
Out of speed follower and No-stop mode

A	B	Output AO1
0	0	Hold
0	1	Regul
1	0	Release
1	1	E-Stop

0 > Switch open, **1** > Switch closed (24VDC terminal s)

Master priority of Keyboard unit.

6.2 – Init and Reg Inputs

Digital inputs Init and Reg are dedicated to the management of calculation process (PID- calculation).

Init	Reg	PID calculation
0	0	calculation stopped
1	0	calculation initialization
0	1	calculation in process
1	1	calculation in process

0 > Switch open, **1** > Switch closed (24VDC terminal)

Caution!

Machine stopped: B open (hold mode)
Machine running : B closed (regulation mode)

7. Connections

Com : 0 V
SetP : Set point input (0 - 10V, or Pot)
+10V : Pot supply

Com : 0V
TC : Tacho input (0 ... 10 V)
LS : Encoder input (5 ... 24 V PNP/NPN)
+24V : 24 V supply

Com : 0 V
DM : Diameter input (sensor US)
+24 V : 24 V supply

S1- : Signal (-)
Com : 0 V
S1+ : Signal (+)
+5V : Sensor supply

Com : 0 V main supply
+24V : main supply (24 V AC or DC)

C1-C2 : PWM Output (Brake connection) 1,0 Amp max.

AL- : Digital output reference
AL1 : Digital output 1
AL2 : Digital output 2

V+ : Digital input voltage remote control
A : Digital input 1
B : Digital input 2
V+ : Digital input remote control
init : INIT (process configuration)
reg : REG (regulation caculation configuration)

Com : 0 V
AO1 : Analog output 1
AO2 : Analog output 2

GND Com/ 0V are connecting to PE
Supply Transformer connecting to earth on secondary side

8. Applications

8.1 Diameter measurement

- open loop

Connections:

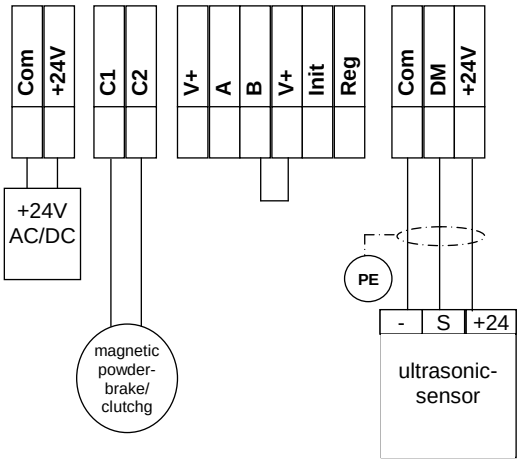

File: Diameter_measure ment.prm

Anzeige	**DISPLAY**	Line 1	**Set Point**	Sollw ert
		Line 2	**Diameter**	Durchmesser
Funktionen	**FUNCTIONS**	Time Delay Start		Zeitverzögerung Start
		Time Delay Stop		Zeitverzögerung Stop
		Hold		Halten
Eingänge	**INPUTS**	Set Point	***50***	Sollw ert
		Diameter Filtering	***1000***	Filter Durchmesser
		Tachymeter Filtering		Filter Tacho
Ausgänge	**OUTPUTS**	Upper Limit	***0***	oberer Grenzw ert
		Bottom Limit	***10***	unterer Grenzw ert
		Power Gain	***100***	Verstärkung Signal
Regler	**REGULATIO**	Max Effort	***100***	max. Kraft
		P		
		I		
		D		
		Measurement Filtering		Filter Messw ert
		Open Loop Gain	***100***	indirektes Signal
		Closed Loop Gain		direktes Signal
		Speed Gain		Geschw indigkeitssignal
		Coeff Speed		Nenngeschw indigkeit
		Overspeed		Überdrehzahl

8.2 Load cell
- closed loop

Process:	Machine/ product stopped:	B= 0V	(open)
	Force on product:	Hold value	
	Machine/ product running:	B= 24V	(closed)
	Force on product:	set point	(closed loop)

Connection:

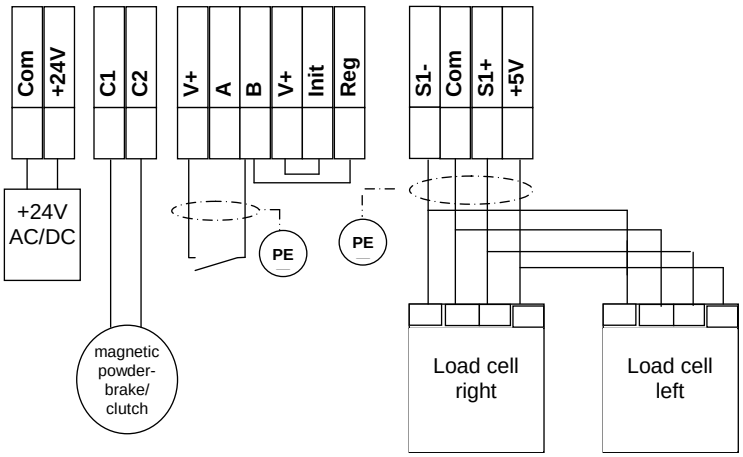

File: Force_feedback.prm

Anzeige	**DISPLAY**	Line 1	**Set Point**	Sollwert
		Line 2	**Diameter**	Durchmesser
Funktionen	**FUNCTIONS**	Time Delay Start		Zeitverzögerung Start
		Time Delay Stop		Zeitverzögerung Stop
		Hold		Halten
Eingänge	**INPUTS**	Set Point	***50***	Sollwert
		Diameter Filtering	***1000***	Filter Durchmesser
		Tachymeter Filtering		Filter Tacho
Ausgänge	**OUTPUTS**	Upper Limit	***0***	oberer Grenzwert
		Bottom Limit	***10***	unterer Grenzwert
		Power Gain	***100***	Verstärkung Signal
Regler	**REGULATION**	Max Effort	***100***	max. Kraft
		P		
		I		
		D		
		Measurement Filtering		Filter Messwert
		Open Loop Gain	***100***	indirektes Signal
		Closed Loop Gain		direktes Signal
		Speed Gain		Geschwindigkeitssignal
		Coeff Speed		Nenngeschwindigkeit
		Overspeed		Überdrehzahl

8.3 Dancer

- closed loop

Process:	Machine/ product stopped:	B= 0V	(open)
	Force on product:	hold value	
	Machine/ product running:	B= 24V	(closed)
	Force on product:	set point	(closed loop)

Connections:

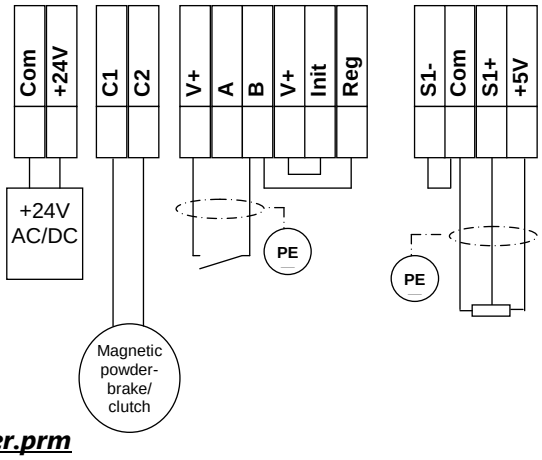

File: Dancer.prm

Anzeige	**DISPLAY**	Line 1	**Set Point**	Sollwert
		Line 2	**Measure**	Messung
Funktionen	**FUNCTIONS**	Time Delay Start	***1***	Zeitverzögerung Start
		Time Delay Stop	***300***	Zeitverzögerung Stop
		Hold	***100***	Halten
Eingänge	**INPUTS**	Set Point	***50***	Sollwert
		Diameter Filtering		Filter Durchmesser
		Tachymeter Filtering		Filter Tacho
Ausgänge	**OUTPUTS**	Upper Limit	***0***	oberer Grenzwert
		Bottom Limit	***10***	unterer Grenzwert
		Power Gain	***100***	Verstärkung Signal
Regler	**REGULATION**	Max Effort		max. Kraft
		P	***100***	
		I	***5***	
		D	***100***	
		Measurement Filtering	***5***	Filter Messwert
		Open Loop Gain	***0***	indirektes Signal
		Closed Loop Gain	***100***	direktes Signal
		Speed Gain	***0***	Geschwindigkeitssignal
		Coeff Speed		Nenngeschwindigkeit
		Overspeed	***0***	Überdrehzahl

8.4 Load Cells and motor

- closed loop

Process:	Machine/ product stopped	B= 0V	(open)
	Force on product:	hold value	
	Machine/ product running:	B= 24V	(closed)
	Force on product:	set point	(closed loop)

Connections:

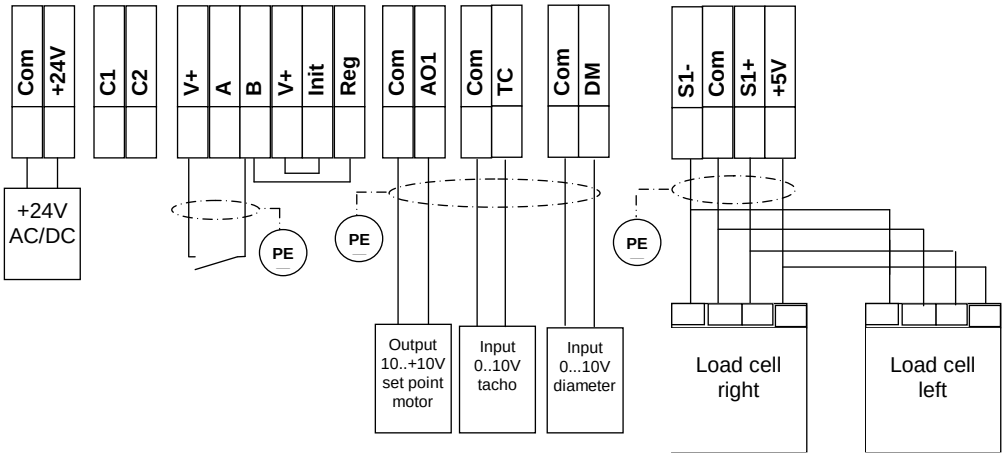

File: Force_motor.prm

Anzeige	**DISPLAY**	Line 1	**Set Point**	Sollwert
		Line 2	**Measure**	Messung
Funktionen	**FUNCTIONS**	Time Delay Start	***1***	Zeitverzögerung Start
		Time Delay Stop	***300***	Zeitverzögerung Stop
		Hold	***10***	Halten
Eingänge	**INPUTS**	Set Point	***100***	Sollwert
		Diameter Filtering	***1000***	Filter Durchmesser
		Tachymeter Filtering	***100***	Filter Tacho
Ausgänge	**OUTPUTS**	Upper Limit	***0***	oberer Grenzwert
		Bottom Limit	***10***	unterer Grenzwert
		Power Gain	***100***	Verstärkung Signal
Regler	**REGULATION**	Max Effort		max. Kraft
		P	***10***	
		I	***5***	
		D	***0***	
		Measurement Filtering	***100***	Filter Messwert
		Open Loop Gain	***0***	indirektes Signal
		Closed Loop Gain	***100***	direktes Signal
		Speed Gain	***Calcul 1***	Geschwindigkeitssignal
		Coeff Speed	**100**	Nenngeschwindigkeit
		Overspeed	***0***	Überdrehzahl

8.5 Load cells, Clutch/ Brake and Motor
- closed loop

Process:	Machine/ product stopped:	B= 0V	(open)
	Force on product:	hold value	
	Machine/ product running:	B= 24V	(closed)
	Force on product:	set point	(closed loop)

Connections:

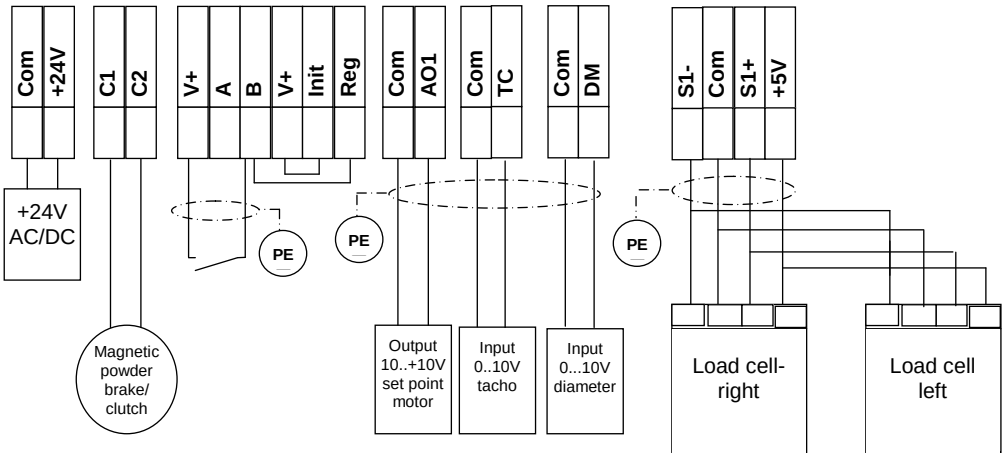

File: Force_clutch_motor.prm

Anzeige	**DISPLAY**	Line 1	**Set Point**	Sollwert
		Line 2	**Measure**	Messung
Funktionen	**FUNCTIONS**	Time Delay Start	***1***	Zeitverzögerung Start
		Time Delay Stop	***300***	Zeitverzögerung Stop
		Hold	***10***	Halten
Eingänge	**INPUTS**	Set Point	***100***	Sollwert
		Diameter Filtering	***1000***	Filter Durchmesser
		Tachymeter Filtering	***100***	Filter Tacho
Ausgänge	**OUTPUTS**	Upper Limit	***0***	oberer Grenzwert
		Bottom Limit	***10***	unterer Grenzwert
		Power Gain	***100***	Verstärkung Signal
Regler	**REGULATION**	Max Effort		max. Kraft
		P	***100***	
		I	***20***	
		D	***0***	
		Measurement Filtering	***100***	Filter Messwert
		Open Loop Gain	***0***	indirektes Signal
		Closed Loop Gain	***100***	direktes Signal
		Speed Gain	***Calcul 1***	Geschwindigkeitssignal
		Coeff Speed	**0**	Nenngeschwindigkeit
		Overspeed	***Calcul 2***	Überdrehzahl

9. Keypad Basics

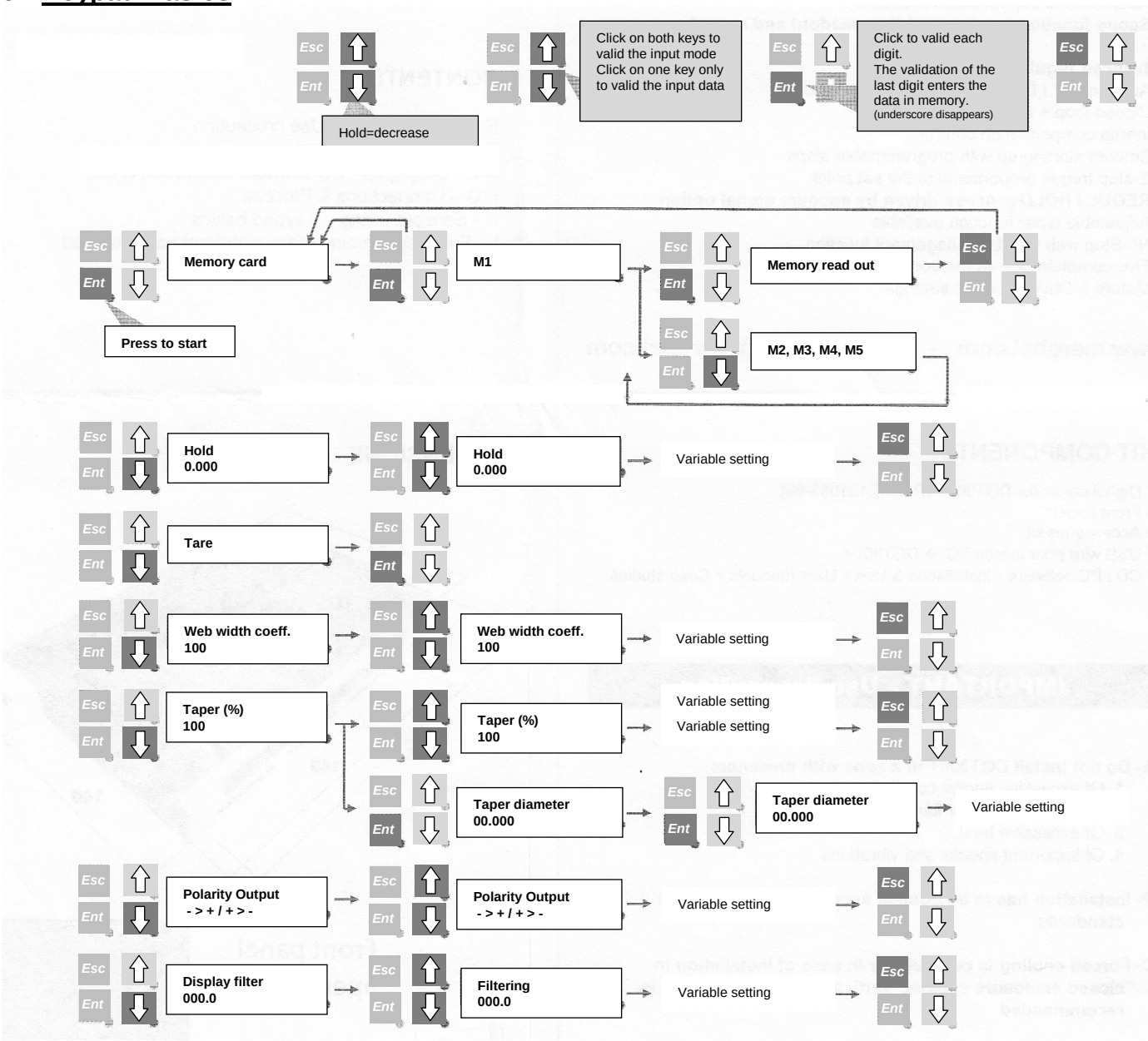

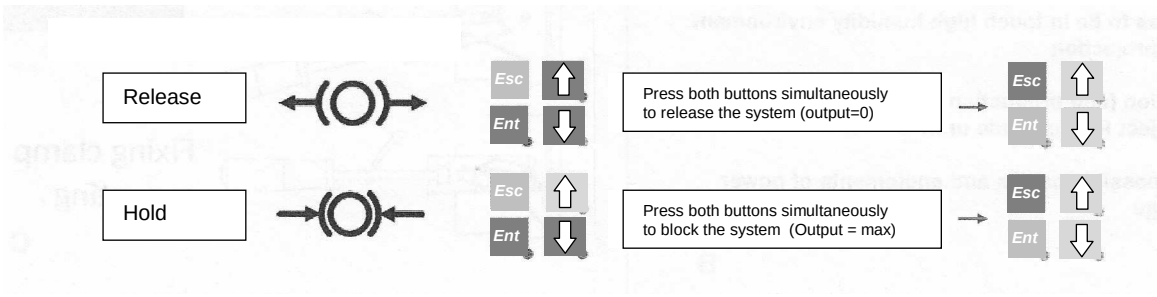

LIEDTKE Antriebstechnik GmbH & Co.KG **Böcklerstraße 1, D-31789 Hameln**
Tel.: +49 5151 9889-0; Fax: +49 5151 67312; e-mail: Liedtke@Liedtke-Antriebstechnik.de

Full Programming menu with front Panel Keypad

level1	level 2	level 3	level 4	level 5	level 6
memory call	choise1				
hold					
Tare					
web width coeff.					
taper %	taper diameter				
output polarity	choise2				
display filter	filtering				
IP setting	adress TCPIP	adress0			
		adress1			
		adress2			
		adress3			
	mask TCPIP	adress0			
		…			
		adress3			
	gateway TCPIP	adress0			
		…			
		adress3			
acess to this setting menu with code password					
ESC - ENT - ESC - ENT - ESC					
display	language	choise3			
	units	measure	choise4		
		diameter	choise5		
	display config.	1st line	choise6		
		2nd line	choise6		
inputs	measure	calibration	upper level value	full scale %	validate
			bottom level value	validate	
		preset 0-10V			
		Tare			
		filtering			
	set point	set point option->	internal	set point value	
				slope duration	
			external 0-10V		
		filtering			
	diameter	Dmax value	validate		
		Dmin value	validate		
		filtering			
	line speed	speed option ->	analog		
			pulse	nb pulse / m	
				threshold	
		filtering			
regulation typet	open loop	max. value	inertia gain	web width	
	basis PID	P:			
		I:			
		D:			
		loop coeff.	OL coeff.		
			CL coeff.		
			inertia gain	web width coeff.	
			speed gainl	coeff. speed	
				overspeed	
	variable PID	max diameter coeff.	P:		
			I:		
			D:		
		min diameter coeff.	p:		
			i:		
			d:		
		loop coeff.	OL coeff		
			CL coeff		
			inertia gain	web width coeff.	
			speed gain	coeff. Speed	
				overspeed	
functions	time delay start	duration (*10ms)			
	time delay stop	duration (*10ms)			
	stop option	choise7			
	no stop	choise8			
	hold	hold			
	taper diam.	taper (%)	Kennlinie Durchm.		
outputs	threshold	upper limit			
		bottom limit			
	AO2 readout	choise9			
	alarms	AL1: error range			
		AL2: diam.limit			
	power output	gain			
memories	save	choise1			
	call	choise1			

choise1	M1 M2 M3 M4 M5
choise2	- → + + → -
choise3	french english italiano german chinese japanese türkish spanish
choise4	N kg lb Nm PLI Ftlb %
choise5	m ft
choise6	AO1 readout AO2 readout set point value diameter measure AO1 config AO2 config
choise7	fixed proportional
choise8	disable enable
choise9	set point measure diameter rotation speed

DGT300+